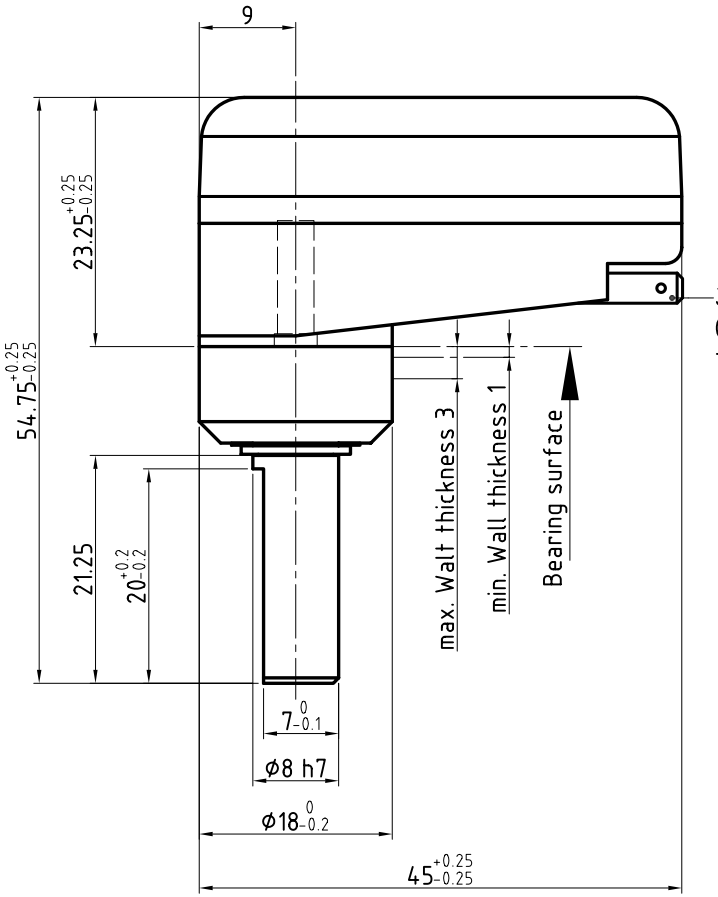

3 Quick disconnect terminals 2.8x0.8mm
(Flat tab matching with flat receptacles of the fitting size)

Mounting holes

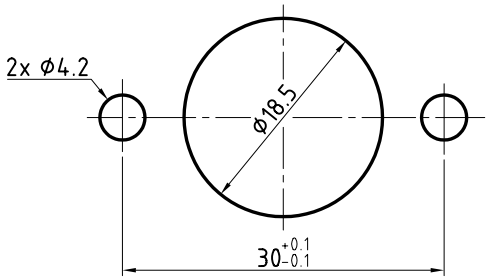

Caution !
Fixation should be made
with the delivered self furrowing
PT–screws WN1412 K 40,
lenght 12mm, Inox
max. penetrating depth: 7.5mm
Bossard Int. Inc. Std. BN 13579

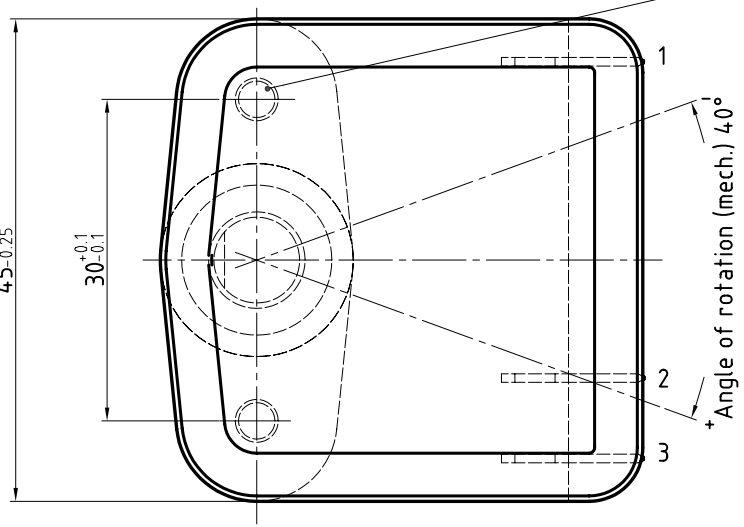

Output voltage versus angle of rotation

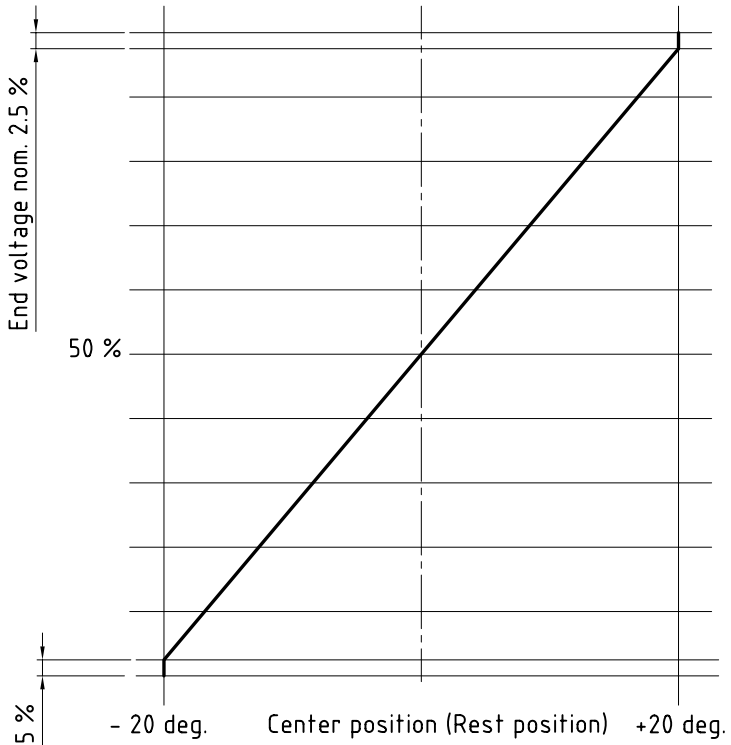

Direction of rotation

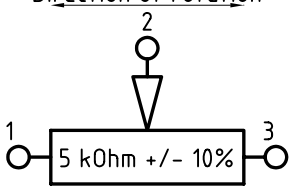

						Oberfläche	Maßstab 2:1	Position / Menge 1
					Datum	Name		
				Bearb.	03.03.2000	Th	Rotary potentiometer	
				Gepr.				
				Norm				
c	Ua in Vs, 3.25 in 2.5%	19.1.2000	TH	GENGE &THOMA AG CH-2543 Lengnau/Biel			45-020E c	Blatt
b	Gehäuse schräg	22.12.1998	TH					Bl
a	Fläche zugefügt	18.12.1998	TH					
Zust.	Änderung	Datum	Name	Dateiname D:\Dwg WP45\45-020Ec.dwg				